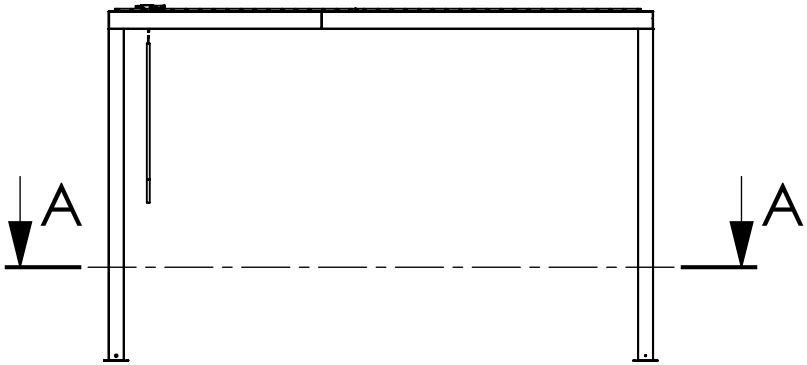
A
A

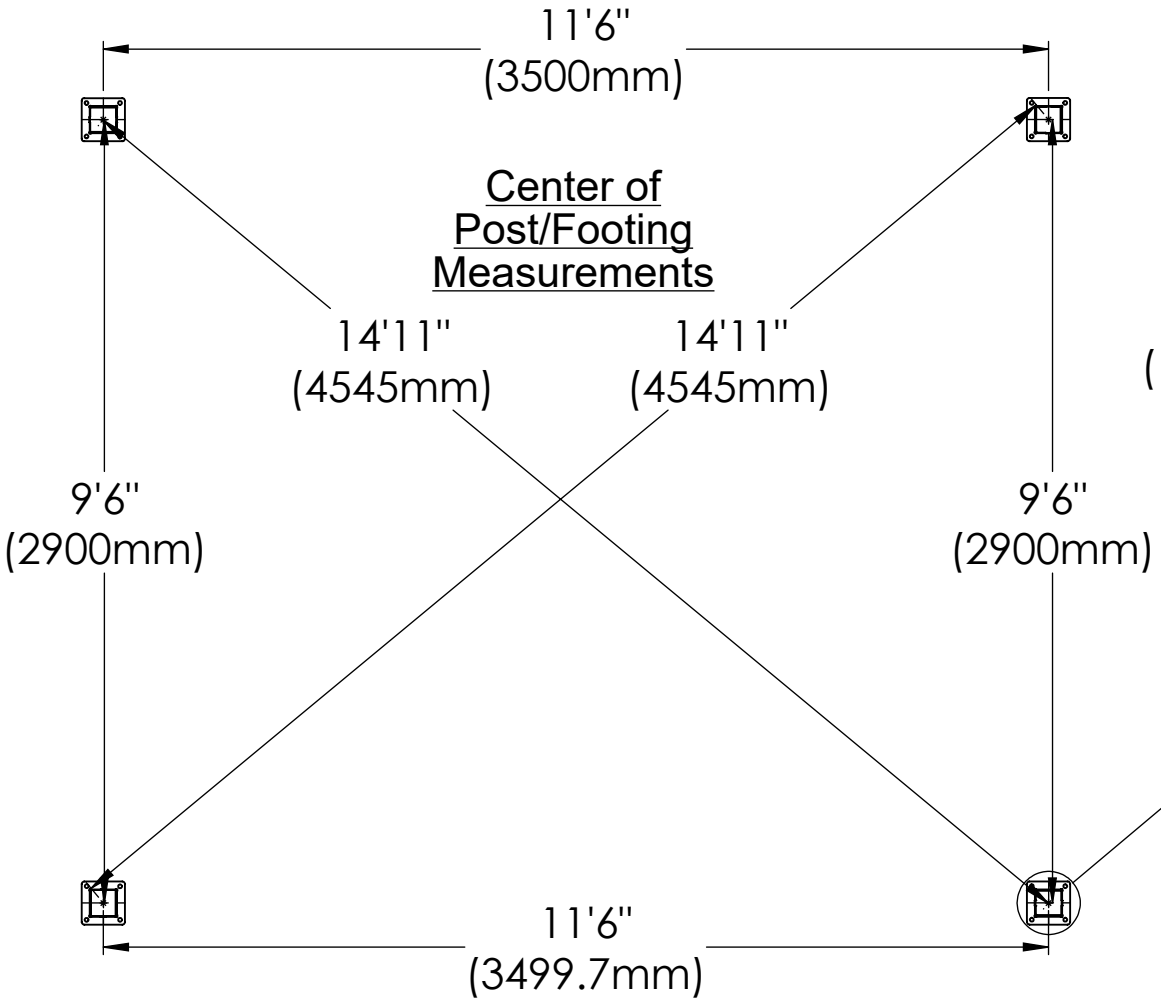
11'6"
(3500mm)
Center of
Post/Footing
Measurements
14'11"
(4545mm)
14'11"
(4545mm)
9'6"
(2900mm)
9'6"
(2900mm)
11'6"
(3499.7mm)

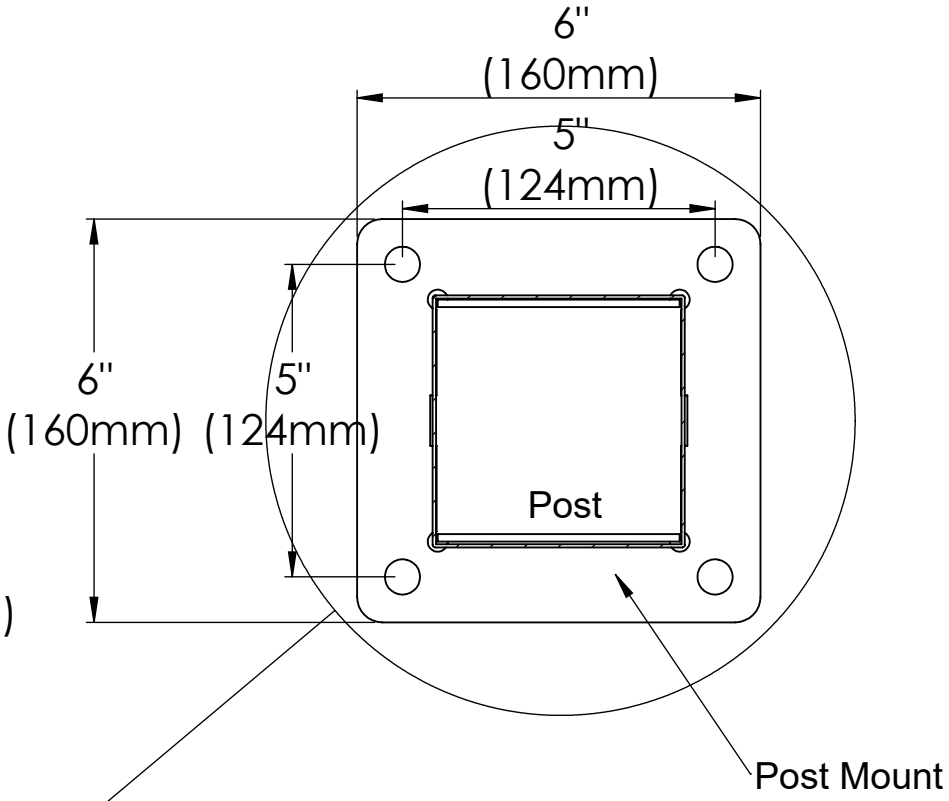
6"
(160mm)
5"
(124mm)
6"
(160mm)
5"
(124mm)
Post
Post Mount

Post Detail